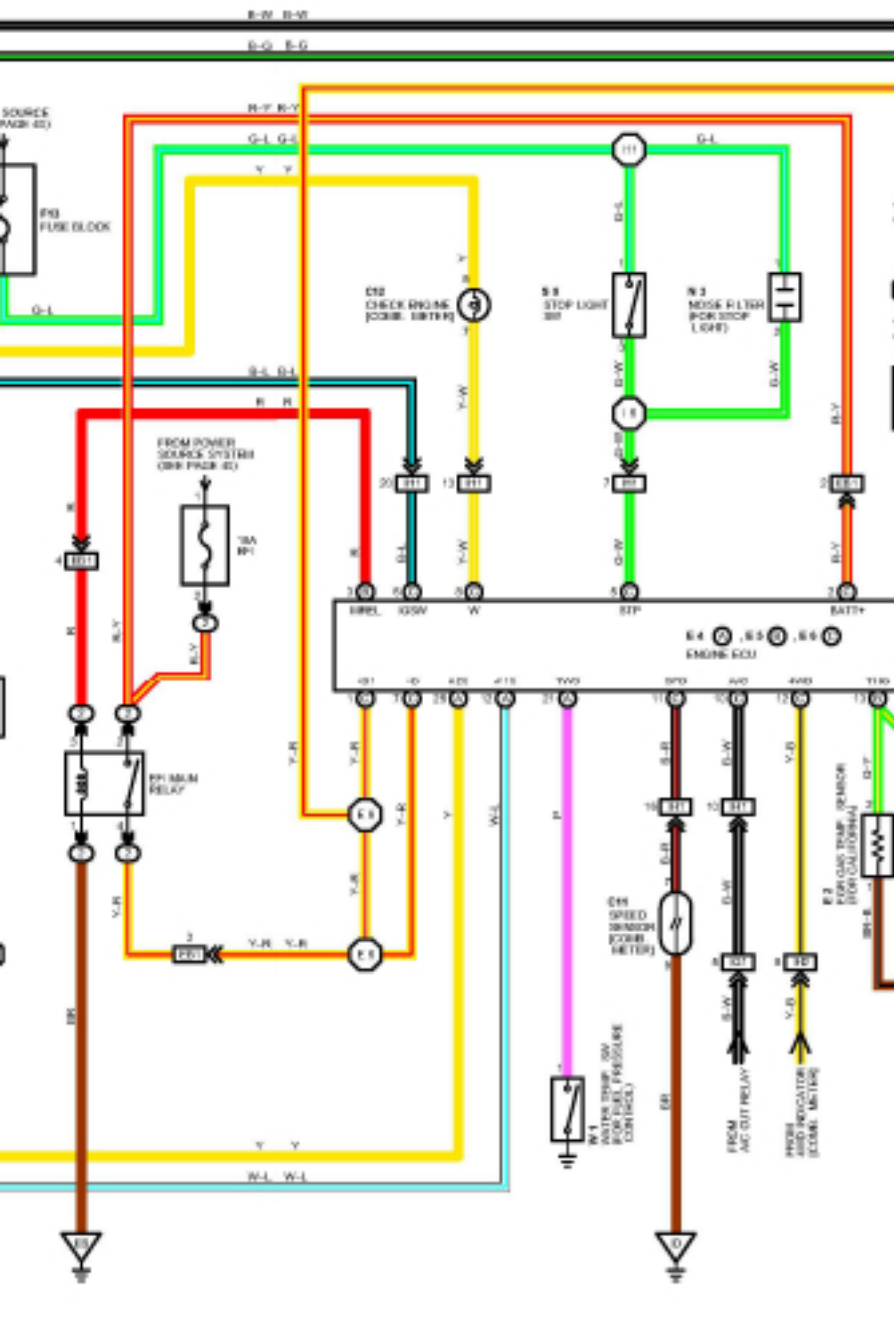

FUSE BLOCK
CHECK ENGINE
STOP LIGHT
NOISE FILTER
FROM POWER SOURCE SYSTEM
FP1 MAIN RELAY
FIREL
IGSW
W
STP
BATT+
ENGINE ECU
SPEED SENSOR
FROM AIC CUT RELAY