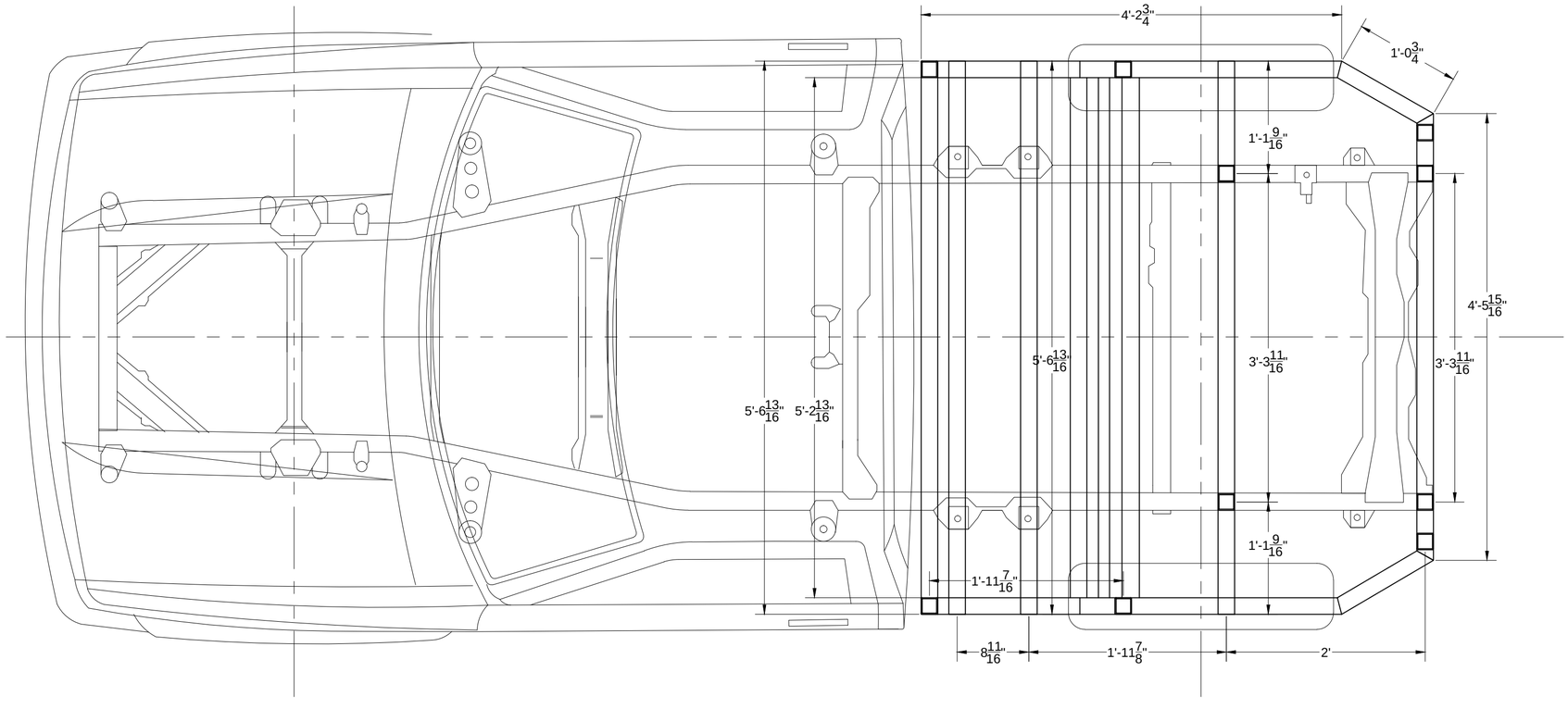
4'-2 3/4"
1'-0 3/4"
1'-1 9/16"
4'-5 15/16"
5'-6 13/16"
3'-3 11/16"
3'-3 11/16"
5'-6 13/16"
5'-2 13/16"
1'-1 9/16"
1'-11 7/16"
8 11/16"
1'-11 7/8"
2'

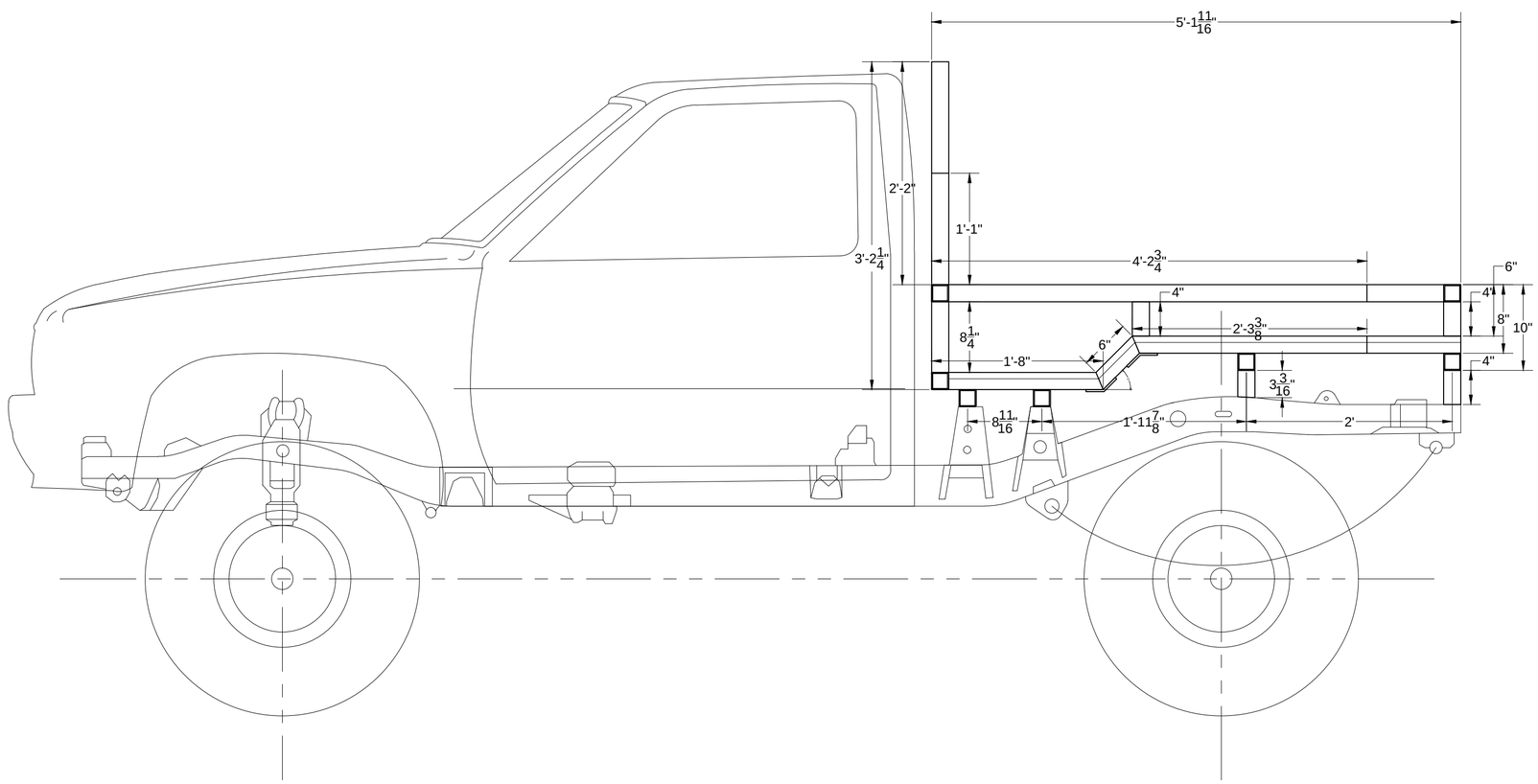
5'-1 11/16"
2'-2"
1'-1"
3'-2 1/4"
4'-2 3/4"
6"
4"
4"
8"
10"
4"
2'-3 3/8"
8 1/4"
6"
1'-8"
3 3/16"
8 11/16"
1'-11 7/8"
2'