(Cont. next page) 43

Engine Control (1VD-FTV)

* 2 : Before Aug. 2012 Production
* 3 : From Aug. 2012 Production

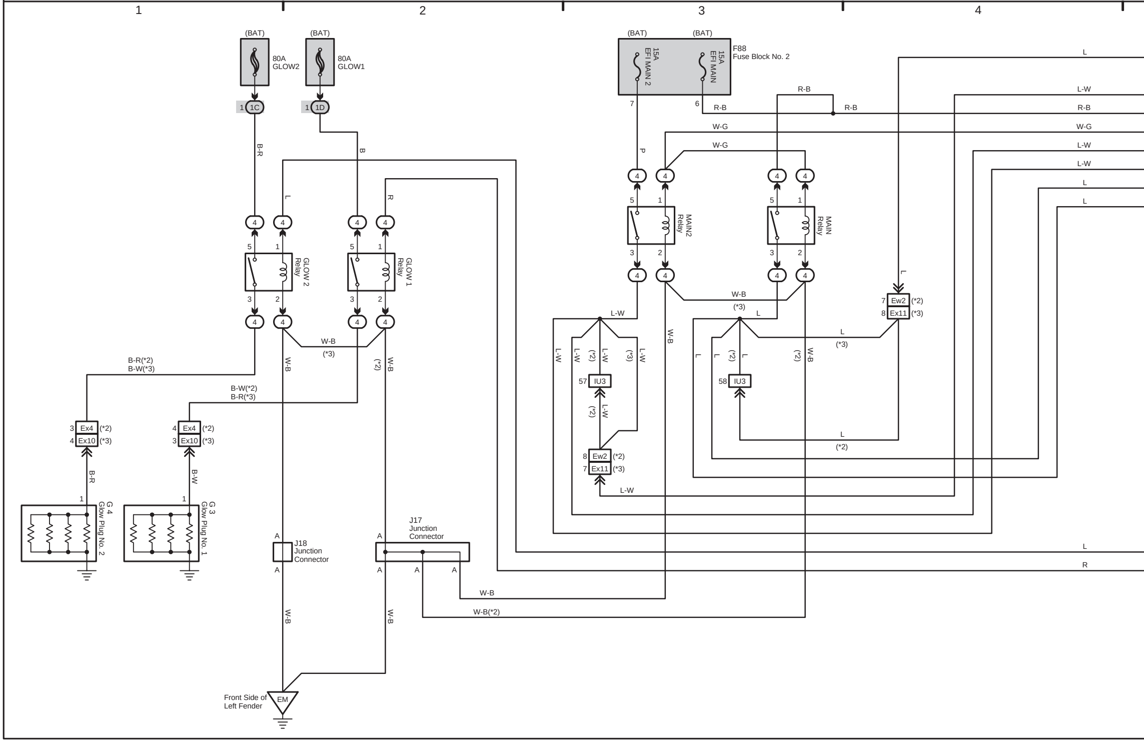
1
2
3
4
(BAT)
80A GLOW2
(BAT)
80A GLOW1
1 1C
1 1D
B-R
B
L
R
GLOW 2 Relay
GLOW 1 Relay
W-B
(*3)
(*2)
B-R(*2)
B-W(*3)
B-W(*2)
B-R(*3)
3 Ex4 (*2)
4 Ex10 (*3)
4 Ex4 (*2)
3 Ex10 (*3)
B-R
B-W
G 4 Glow Plug No. 2
G 3 Glow Plug No. 1
J18 Junction Connector
J17 Junction Connector
A
Front Side of Left Fender
EM
(BAT)
(BAT)
15A EFI MAIN 2
15A EFI MAIN
F88 Fuse Block No. 2
7
6
P
R-B
W-G
L-W
MAIN2 Relay
MAIN Relay
W-B
(*3)
L-W
L
57 IU3
58 IU3
7 Ew2 (*2)
8 Ex11 (*3)
8 Ew2 (*2)
7 Ex11 (*3)
L
(*3)
(*2)
W-B(*2)
R

(Cont. next page)

Engine Control (1VD-FTV)

* 2 : Before Aug. 2012 Production
* 3 : From Aug. 2012 Production

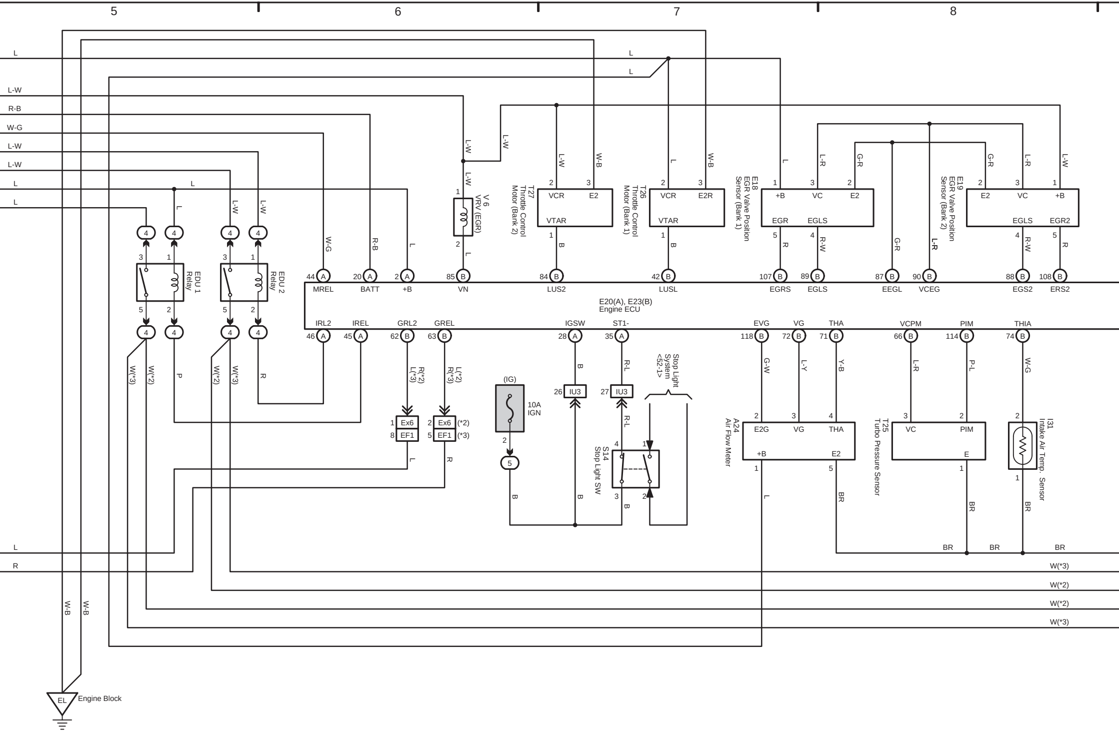
5
6
7
8
EDU 1 Relay
EDU 2 Relay
V 6 VRV (EGR)
T27 Throttle Control Motor (Bank 2)
T26 Throttle Control Motor (Bank 1)
E18 EGR Valve Position Sensor (Bank 1)
E19 EGR Valve Position Sensor (Bank 2)
VCR
E2
VTAR
E2R
+B
VC
EGR
EGLS
EGR2
E20(A), E23(B) Engine ECU
MREL
BATT
+B
VN
LUS2
LUSL
EGRS
EGLS
EEGL
VCEG
EGS2
ERS2
IRL2
IREL
GRL2
GREL
IGSW
ST1-
EVG
VG
THA
VCPM
PIM
THIA
(IG)
10A IGN
IU3
Ex6
EF1
(*2)
(*3)
S14 Stop Light SW
Stop Light System <52-1>
A24 Air Flow Meter
E2G
T25 Turbo Pressure Sensor
E
I31 Intake Air Temp. Sensor
EL
Engine Block
L
L-W
R-B
W-G
R
W-B
G-R
L-R
R-W
P
B
G-W
L-Y
Y-B
P-L
BR
W(*2)
W(*3)
R(*2) L(*3)
L(*2) R(*3)
R-L

(Cont. next page)

Engine Control (1VD-FTV)

* 1 : Shielded
* 2 : Before Aug. 2012 Production
* 3 : From Aug. 2012 Production

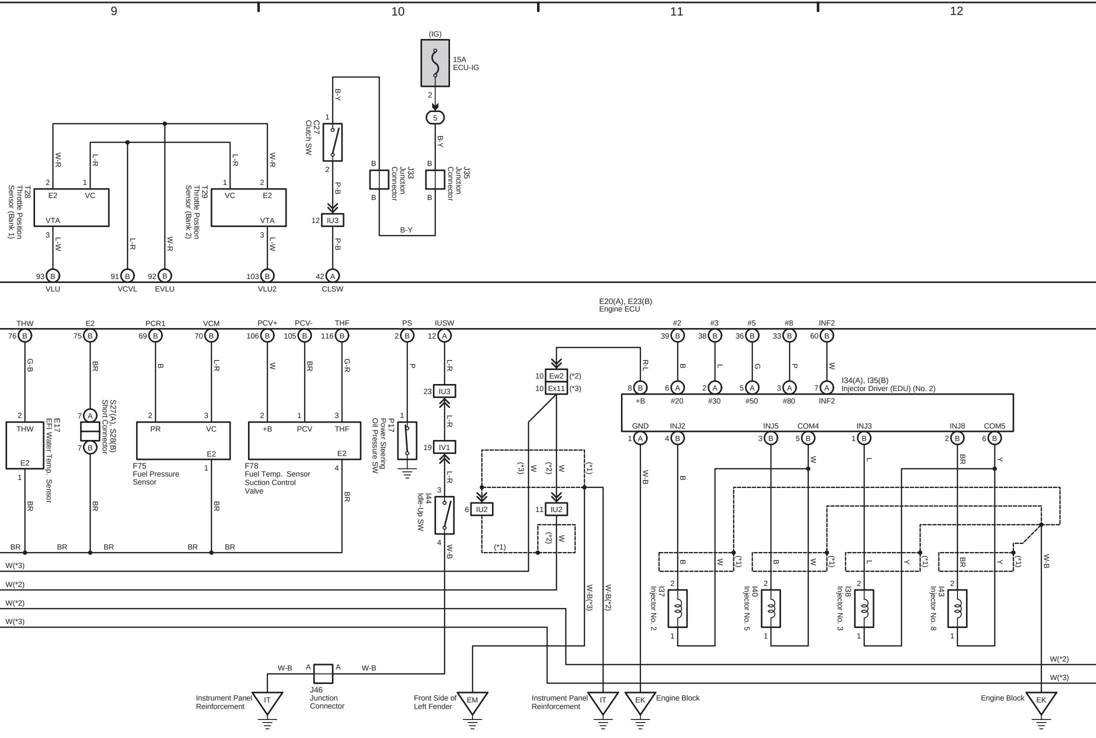
9
10
11
12
(IG)
15A
ECU-IG
2
5
B-Y
1
C27
Clutch SW
2
P-B
12 IU3
B
J33
Junction
Connector
B
J35
Junction
Connector
W-R
L-R
T28
Throttle Position
Sensor (Bank 1)
E2
VC
VTA
T29
Throttle Position
Sensor (Bank 2)
L-W
93 B VLU
91 B VCVL
92 B EVLU
103 B VLU2
42 A CLSW
E20(A), E23(B)
Engine ECU
76 B THW
75 B E2
69 B PCR1
70 B VCM
106 B PCV+
105 B PCV-
116 B THF
2 B PS
12 A IUSW
39 B #2
38 B #3
36 B #5
33 B #8
60 B INF2
G-B
BR
B
L-R
W
G-R
P
E17
EFI Water Temp. Sensor
THW
7 A
S27(A), S28(B)
Short Connector
7 B
F75
Fuel Pressure
Sensor
PR
F78
Fuel Temp. Sensor
Suction Control
Valve
+B
PCV
THF
P17
Power Steering
Oil Pressure SW
23 IU3
19 IV1
3
I44
Idle-Up SW
4
W-B
10 Ew2 (*2)
10 Ex11 (*3)
R-L
6 IU2
11 IU2
(*1)
(*2)
(*3)
I34(A), I35(B)
Injector Driver (EDU) (No. 2)
8 B +B
6 A #20
2 A #30
5 A #50
3 A #80
7 A INF2
1 A GND
4 B INJ2
3 B INJ5
5 B COM4
1 B INJ3
2 B INJ8
6 B COM5
L
G
Y
I37
Injector No. 2
I40
Injector No. 5
I38
Injector No. 3
I43
Injector No. 8
W(*3)
W(*2)
W-B(*3)
W-B(*2)
J46
Junction
Connector
A
IT
Instrument Panel
Reinforcement
EM
Front Side of
Left Fender
EK
Engine Block

Engine Control (1VD-FTV)

* 1 : Shielded
* 2 : Before Aug. 2012 Production
* 3 : From Aug. 2012 Production

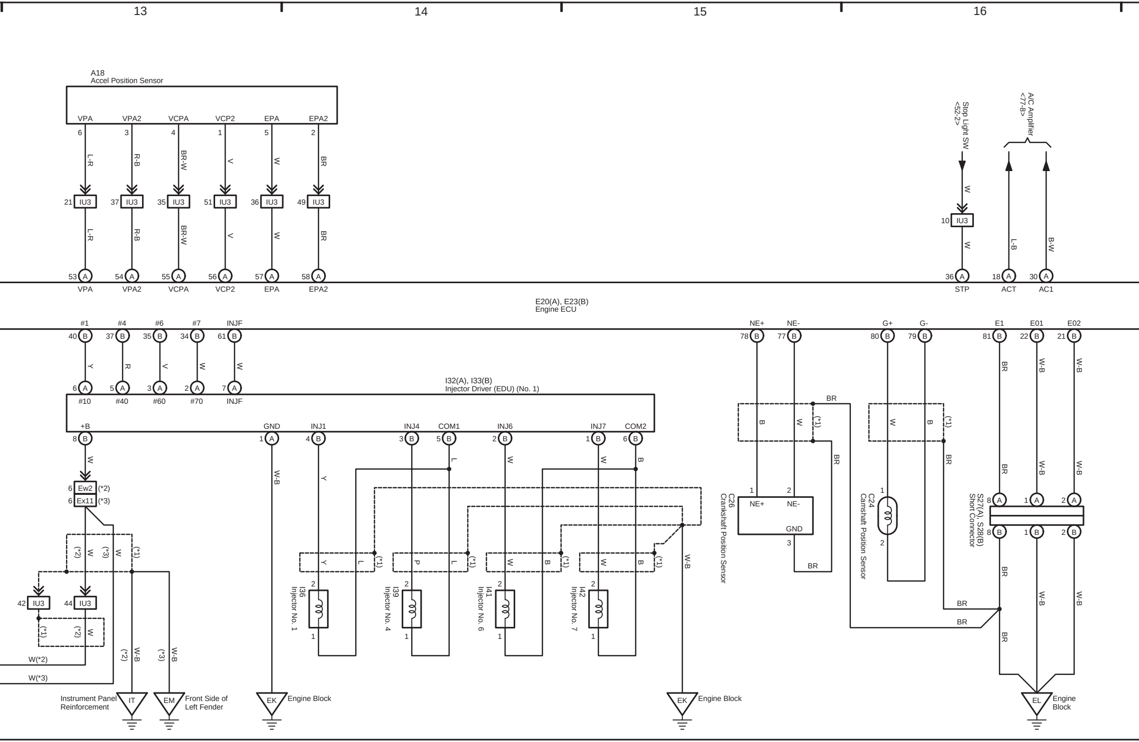
13
14
15
16
A18
Accel Position Sensor
VPA
VPA2
VCPA
VCP2
EPA
EPA2
L-R
R-B
BR-W
V
W
BR
21 IU3
37 IU3
35 IU3
51 IU3
36 IU3
49 IU3
53 A VPA
54 A VPA2
55 A VCPA
56 A VCP2
57 A EPA
58 A EPA2
Stop Light SW <52-2>
A/C Amplifier <77-8>
10 IU3
L-B
B-W
36 A STP
18 A ACT
30 A AC1
E20(A), E23(B)
Engine ECU
#1 40 B
#4 37 B
#6 35 B
#7 34 B
INJF 61 B
Y
R
NE+ 78 B
NE- 77 B
G+ 80 B
G- 79 B
E1 81 B
E01 22 B
E02 21 B
W-B
I32(A), I33(B)
Injector Driver (EDU) (No. 1)
6 A #10
5 A #40
3 A #60
2 A #70
7 A INJF
+B 8 B
GND 1 A
INJ1 4 B
INJ4 3 B
COM1 5 B
INJ6 2 B
INJ7 1 B
COM2 6 B
6 Ew2 (*2)
6 Ex11 (*3)
(*1)
(*2)
(*3)
42 IU3
44 IU3
W(*2)
W(*3)
L
P
B
I36
Injector No. 1
I39
Injector No. 4
I41
Injector No. 6
I42
Injector No. 7
C26
Crankshaft Position Sensor
NE+
NE-
GND
C24
Camshaft Position Sensor
S27(A), S28(B)
Short Connector
IT
Instrument Panel Reinforcement
EM
Front Side of Left Fender
EK
Engine Block
EL
Engine Block

Engine Control (1VD-FTV)

* 2 : Before Aug. 2012 Production
* 3 : From Aug. 2012 Production

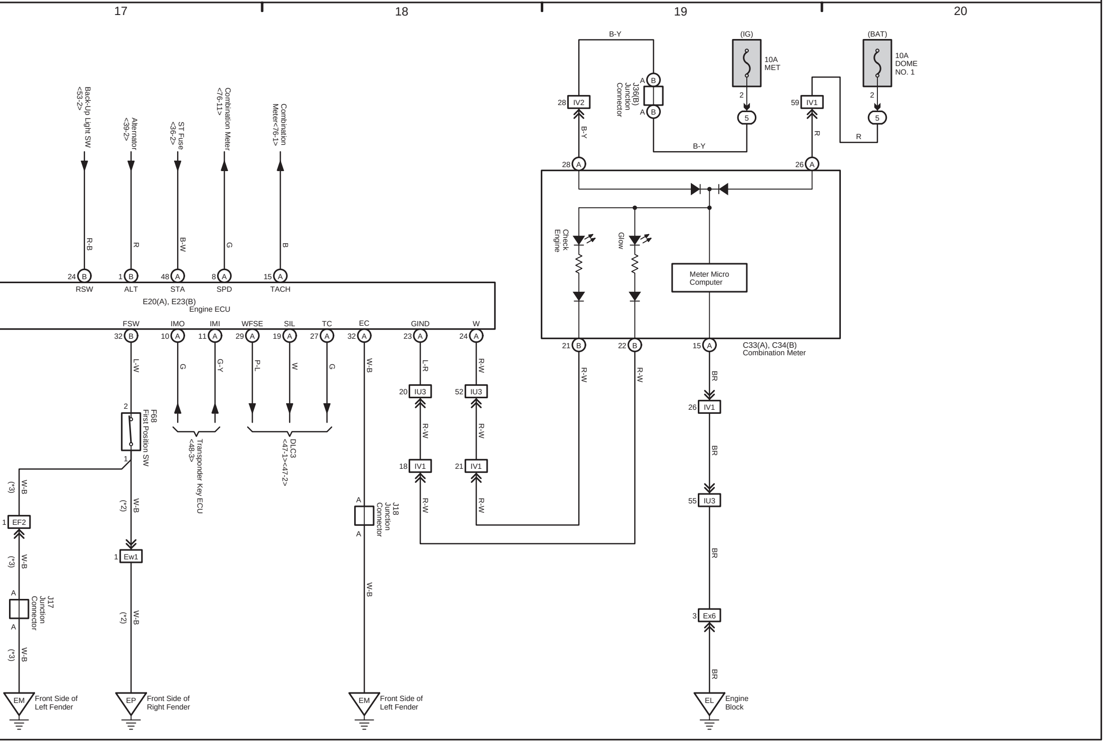
17
18
19
20
Back-Up Light SW <53-2>
Alternator <39-2>
ST Fuse <36-2>
Combination Meter <76-11>
Combination Meter<76-1>
R-B
R
B-W
G
B
24 B RSW
1 B ALT
48 A STA
8 A SPD
15 A TACH
E20(A), E23(B)
Engine ECU
FSW 32 B
IMO 10 A
IMI 11 A
WFSE 29 A
SIL 19 A
TC 27 A
EC 32 A
GIND 23 A
W 24 A
L-W
G
G-Y
P-L
W
G
W-B
L-R
R-W
2
F68
First Position SW
1
Transponder Key ECU <48-3>
DLC3 <47-1><47-2>
20 IU3
52 IU3
18 IV1
21 IV1
(*3) W-B
1 EF2
(*2) W-B
1 Ew1
A
J17
Junction Connector
A
A
J18
Junction Connector
A
EM Front Side of Left Fender
EP Front Side of Right Fender
EM Front Side of Left Fender
B-Y
28 IV2
A B
J36(B)
Junction Connector
A B
(IG)
10A MET
2
5
(BAT)
10A DOME NO. 1
2
5
59 IV1
R
28 A
26 A
Check Engine
Glow
Meter Micro Computer
21 B
22 B
15 A
C33(A), C34(B)
Combination Meter
BR
26 IV1
55 IU3
3 Ex6
EL Engine Block